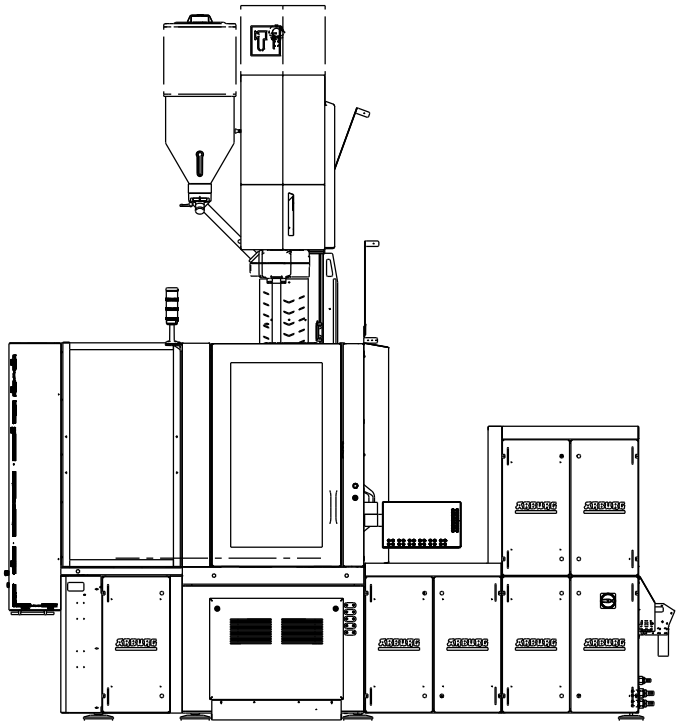

ALLROUNDER 1600 T

Table diameter: 1600 mm
Clamping force: 1000, 1600, 2000, 2500 kN
Injection unit (acc. to EUROMAP): 70, 100, 170, 290, 400, 800

ARBURG

MACHINE DIMENSIONS UP TO 2000 KN | 1600 T

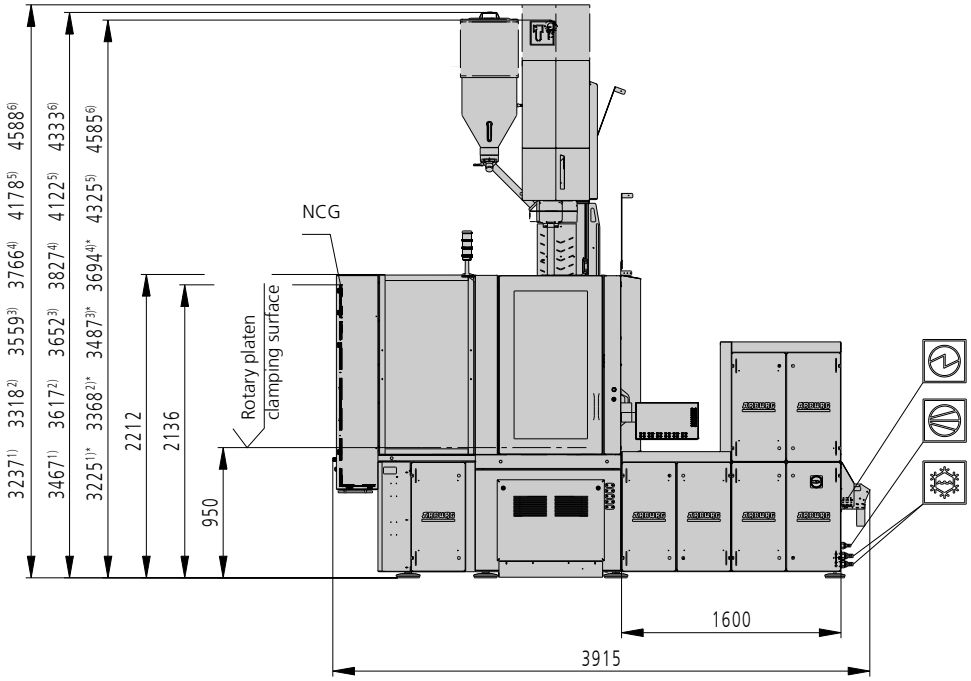

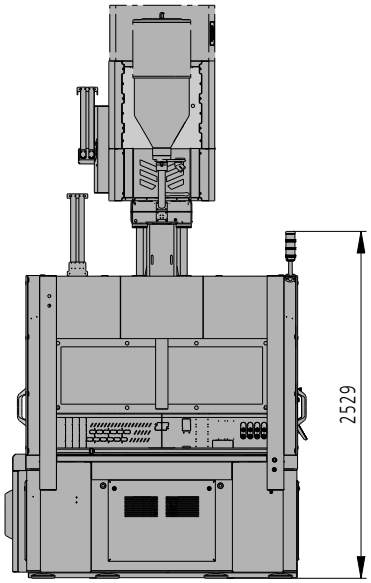

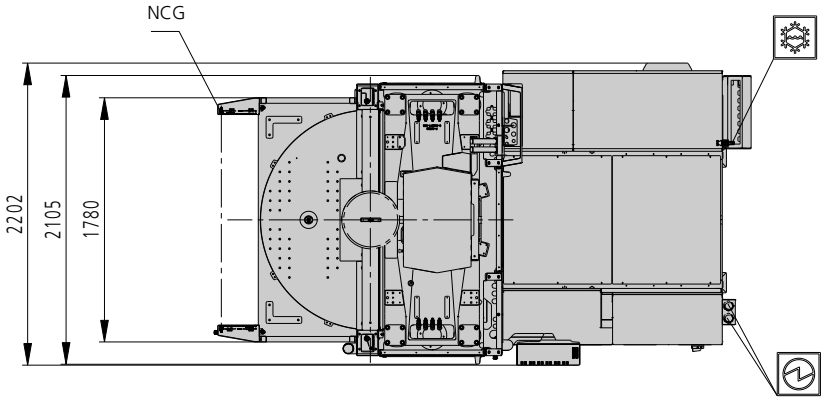

Pneumatic connection

Electrical connection

Cooling water connection

1) Injection unit 70
2) Injection unit 100
3) Injection unit 170
4) Injection unit 290
5) Injection unit 400
6) Injection unit 800
NCG - Non-contacting guard (photoelectric safety barrier)
* Attachment point for hoisting equipment with lifted injection unit

TECHNICAL DATA | 1600 T

Clamping unit				1600 T
with clamping force		max.	kN	1000
Opening force | stroke		max.	kN | mm	115 | 300
Mould height, fixed | variable		min.	mm	400 | ---
Platen daylight fixed | variable		max.	mm	700 | ---
Table diameter			mm	1600
Angle of rotation, left/right				180°
Rotation time for 180°		min.	s	2,4
Weight on rotary table		max.	kg	2000
Weight of movable mould half		max.	kg	1000
Ejector force | stroke		max.	kN | mm	45 | 175
Dry cycle time EUROMAP [2]	2 pumps	min.	s - mm	4,3 | 290
	Accum.	min.	s - mm	---

Injection unit				70			100		
with screw diameter			mm	18	22	25	20	25	30
Effective screw length			L/D	24,5	20	17,5	25	20	16,7
Screw stroke		max.	mm		90			100	
Calculated stroke volume		max.	cm³	23	34	44	31	49	71
Shot weight		max.	g PS	21	31	40	29	45	65
Material throughput		max.	kg/h PS	4,1	5,5	6,5	5,5	8	9,5
		max.	kg/h PA6.6	2,1	2,8	3,3	2,8	4	4,9
Injection pressure		max.	bar	2500	2000	1550	2500	2000	1390
Holding pressure		max.	bar	2500	2000	1550	2500	2000	1390
Injection flow [2]	2 pumps	max.	cm³/s	68	100	130	90	142	204
	Accum.	max.	cm³/s	138	208	268	172	268	388
Screw circumferential	2 pumps	max.	m/min	45	55	62	32	40	48
speed [2]	Accum.	max.	m/min	15	19	22	11	14	17
Screw torque		max.	Nm	90	110	120	120	150	180
Nozzle contact force | retraction stroke		max.	kN | mm		50 | 250			50 | 280	
Heating capacity | zones			kW		4,1 | 4			4,9 | 5	
Feed hopper			l		25			50	

Drive and connection				2 pumps		Accum.	
with injection unit				70	100	70	100
Net weight of machine			kg	10900	11000	10900	11000
Sound press. level | Insecurity [4]			dB(A)		70|3		70|3
Oil filling			l		240		240
Drive power [2]		max.	kW		18,5		18,5
Electrical connection [3]			kW	33	30	33	30
	Total		A		100		100
	Machine		A		---		---
	Heating		A		---		---
Cooling water connection		max.	°C		30		30
		min.	Δp bar		1,5 | DN 25		1,5 | DN 25

Machine type
with EUROMAP size designation [1]
1600 T 1000-70 | 100

Upon request: other machine types and mould installation heights, screws, drive powers etc.
All specifications relate to the basic machine version. Deviations are possible depending on variants, process settings and material type. Depending on the drive, certain combinations, e.g. max. injection pressure and max. injection flow may be mutually exclusive.

1) Clamping force (kN) - size of injection unit = max. stroke volume (cm³) x max. injection pressure (kbar)
2) Specifications depend on the drive variant / drive configuration.
3) Specifications relate to 400 V/50 Hz.
4) Emission sound pressure level at the workplace. Detailed information in the operating instructions.
[ ] Specifications apply to alternative equipment.

TECHNICAL DATA | 1600 T

Clamping unit				1600 T
with clamping force		max.	kN	1000
Opening force | stroke		max.	kN | mm	115 | 300
Mould height, fixed | variable		min.	mm	400 | ---
Platen daylight fixed | variable		max.	mm	700 | ---
Table diameter			mm	1600
Angle of rotation, left/right				180°
Rotation time for 180°		min.	s	2,4
Weight on rotary table		max.	kg	2000
Weight of movable mould half		max.	kg	1000
Ejector force | stroke		max.	kN | mm	45 | 175
Dry cycle time EUROMAP [2]	2 pumps	min.	s - mm	4,3 - 290
	Accum.	min.	s - mm	---

Injection unit				170			290			400		
with screw diameter			mm	25	30	35	30	35	40	35	40	45
Effective screw length			L/D	24	20	17	23,3	20	17,5	23	20	18
Screw stroke		max.	mm		120			150			160	
Calculated stroke volume		max.	cm³	59	85	115	106	144	188	154	201	254
Shot weight		max.	g PS	54	77	105	97	132	172	141	184	232
Material throughput		max.	kg/h PS	10	13,5	16	17	20,5	24,5	25	29	35
		max.	kg/h PA6.6	5	7	8	8,5	10,5	12,5	12,5	15	17,5
Injection pressure		max.	bar	2500	2000	1470	2500	2000	1530	2500	2000	1580
Holding pressure		max.	bar	2500	2000	1470	2500	2000	1530	2500	2000	1580
Injection flow [2]	2 pumps	max.	cm³/s	94	136	186	130	178	232	128	168	212
	Accum.	max.	cm³/s	216	312	424	316	430	562	492	642	814
Screw circumferential	2 pumps	max.	m/min	47	53	90	59	69	79	59	69	79
speed [2]	Accum.	max.	m/min	14	17	19	20	24	27	16	19	21
Screw torque		max.	Nm		250			380			550	
Nozzle contact force | retraction stroke		max.	kN | mm		50 | 300			60 | 300			60 | 300	
Heating capacity | zones			kW		9,4 | 5			6,4 | 5			6,4 | 5	
Feed hopper			l		50			50			50	

Drive and connection				2 Pumpen			Speicher			
with injection unit				170	290	400	170	290	400	
Net weight of machine			kg	11200	11500	11200	11200	11500	11200	
Sound press. level | Insecurity [4]			dB(A)		70|3			70|3		
Oil filling			l		240			240		
Drive power [2]		max.	kW	22	30	22	22	30	22	
Electrical connection [3]			kW	36	55	36	36	55	36	
	Total		A	100	125	100	100	125	100	
	Machine		A		---			---		
	Heating		A		---			---		
Cooling water connection		max.	°C		30			30		
		min.	Δp bar		1,5 | DN 25			1,5 | DN 25		

Machine type
with EUROMAP size designation [1]
1600 T 1000-170 | 290 | 400

Upon request: other machine types and mould installation heights, screws, drive powers etc.
All specifications relate to the basic machine version. Deviations are possible depending on variants, process settings and material type. Depending on the drive, certain combinations, e.g. max. injection pressure and max. injection flow may be mutually exclusive.

1) Clamping force (kN) - size of injection unit = max. stroke volume (cm³) x max. injection pressure (kbar)
2) Specifications depend on the drive variant / drive configuration.
3) Specifications relate to 400 V/50 Hz.
4) Emission sound pressure level at the workplace. Detailed information in the operating instructions.
[ ] Specifications apply to alternative equipment.

TECHNICAL DATA | 1600 T

Clamping unit				1600 T
with clamping force		max.	kN	1600
Opening force | stroke		max.	kN | mm	115 | 300
Mould height, fixed | variable		min.	mm	400 | ---
Platen daylight fixed | variable		max.	mm	700 | ---
Table diameter			mm	1600
Angle of rotation, left/right				180°
Rotation time for 180°		min.	s	2,4
Weight on rotary table		max.	kg	2000
Weight of movable mould half		max.	kg	1000
Ejector force | stroke		max.	kN | mm	45 | 175
Dry cycle time EUROMAP [2]	2 pumps	min.	s - mm	4,3 - 290
	Accum.	min.	s - mm	---

Injection unit				70			100			170		
with screw diameter			mm	18	22	25	20	25	30	25	30	35
Effective screw length			L/D	24,5	20	17,5	25	20	16,7	24	20	17
Screw stroke		max.	mm		90			100			120	
Calculated stroke volume		max.	cm³	23	34	44	31	49	71	59	85	115
Shot weight		max.	g PS	21	31	40	29	45	65	54	77	105
Material throughput		max.	kg/h PS	4,1	5,5	6,5	5,5	8	9,5	10	13,5	16
		max.	kg/h PA6.6	2,1	2,8	3,3	2,8	4	4,9	5	7	8
Injection pressure		max.	bar	2500	2000	1550	2500	2000	1390	2500	2000	1470
Holding pressure		max.	bar	2500	2000	1550	2500	2000	1390	2500	2000	1470
Injection flow [2]	2 pumps	max.	cm³/s	68	100	130	90	142	204	94	136	186
	Accum.	max.	cm³/s	138	208	268	172	268	388	216	312	424
Screw circumferential	2 pumps	max.	m/min	63	75	80	59	69	79	40	48	56
speed [2]	Accum.	max.	m/min	15	19	22	11	14	17	14	17	19
Screw torque		max.	Nm		110			150			250	
Nozzle contact force | retraction stroke		max.	kN | mm		50 | 250			50 | 280			50 | 280	
Heating capacity | zones			kW		4,1 | 4			4,9 | 5			4,9 | 5	
Feed hopper			l		25			50			50	

Drive and connection				2 Pumpen			Speicher			
with injection unit				70	100	170	70	100	170	
Net weight of machine			kg	10900	11000	11200	10900	11000	11200	
Sound press. level | Insecurity [4]			dB(A)		70|3			70|3		
Oil filling			l		240			240		
Drive power [2]		max.	kW		18,5			18,5		
Electrical connection [3]			kW	33	30	36	33	30	36	
	Total		A		100			100		
	Machine		A		---			---		
	Heating		A		---			---		
Cooling water connection		max.	°C		30			30		
		min.	Δp bar		1,5 | DN 25			1,5 | DN 25		

Machine type
with EUROMAP size designation [1]
1600 T 1600-70 | 100 | 170

Upon request: other machine types and mould installation heights, screws, drive powers etc.
All specifications relate to the basic machine version. Deviations are possible depending on variants, process settings and material type. Depending on the drive, certain combinations, e.g. max. injection pressure and max. injection flow may be mutually exclusive.

1) Clamping force (kN) - size of injection unit = max. stroke volume (cm³) x max. injection pressure (kbar)
2) Specifications depend on the drive variant / drive configuration.
3) Specifications relate to 400 V/50 Hz.
4) Emission sound pressure level at the workplace. Detailed information in the operating instructions.
[ ] Specifications apply to alternative equipment.

TECHNICAL DATA | 1600 T

Clamping unit				1600 T
with clamping force		max.	kN	1600
Opening force | stroke		max.	kN | mm	115 | 300
Mould height, fixed | variable		min.	mm	400 | ---
Platen daylight fixed | variable		max.	mm	700 | ---
Table diameter			mm	1600
Angle of rotation, left/right				180°
Rotation time for 180°		min.	s	2,4
Weight on rotary table		max.	kg	2000
Weight of movable mould half		max.	kg	1000
Ejector force | stroke		max.	kN | mm	45 | 175
Dry cycle time EUROMAP [2]	2 pumps	min.	s - mm	4,3 - 290
	Accum.	min.	s - mm	---

Injection unit				290			400			800		
with screw diameter			mm	30	35	40	35	40	45	25	50	35
Effective screw length			L/D	23,3	20	17,5	23	20	18	24	20	17
Screw stroke		max.	mm		150			160			200	
Calculated stroke volume		max.	cm³	106	144	188	154	201	254	59	392	115
Shot weight		max.	g PS	97	132	172	141	184	232	54	359	105
Material throughput		max.	kg/h PS	17	20,5	24,5	25	29	35	10	53	16
		max.	kg/h PA6.6	8,5	10,5	12,5	12,5	15	17,5	5	27	8
Injection pressure		max.	bar	2500	2000	1530	2500	2000	1580	2500	2000	1470
Holding pressure		max.	bar	2500	2000	1530	2500	2000	1580	2500	2000	1470
Injection flow [2]	2 pumps	max.	cm³/s	130	178	232	128	168	212	94	214	186
	Accum.	max.	cm³/s	316	430	562	492	642	814	216	656	424
Screw circumferential	2 pumps	max.	m/min	37	44	50	28	32	36	40	60	56
speed [2]	Accum.	max.	m/min	20	24	27	16	19	21	14	17	19
Screw torque		max.	Nm		380			550			880	
Nozzle contact force | retraction stroke		max.	kN | mm		60 | 250			60 | 400			60 | 400	
Heating capacity | zones			kW		6,4 | 4			9,4 | 5			9,4 | 5	
Feed hopper			l		50			50			50	

Drive and connection				2 Pumpen			Speicher			
with injection unit				290	400	800	290	400	800	
Net weight of machine			kg	11200	11000	11500	11500	11200	---	
Sound press. level | Insecurity [4]			dB(A)		70|3			70|3		
Oil filling			l		240			240		
Drive power [2]		max.	kW	30	22	30		18,5		
Electrical connection [3]			kW	55	36	55		30		
	Total		A	125	100	125		100		
	Machine		A		---			---		
	Heating		A		---			---		
Cooling water connection		max.	°C		30			30		
		min.	Δp bar		1,5 | DN 25			1,5 | DN 25		

Machine type
with EUROMAP size designation [1]
1600 T 1600-290 | 400 | 800

Upon request: other machine types and mould installation heights, screws, drive powers etc.
All specifications relate to the basic machine version. Deviations are possible depending on variants, process settings and material type. Depending on the drive, certain combinations, e.g. max. injection pressure and max. injection flow may be mutually exclusive.

1) Clamping force (kN) - size of injection unit = max. stroke volume (cm³) x max. injection pressure (kbar)
2) Specifications depend on the drive variant / drive configuration.
3) Specifications relate to 400 V/50 Hz.
4) Emission sound pressure level at the workplace. Detailed information in the operating instructions.
[ ] Specifications apply to alternative equipment.

TECHNICAL DATA | 1600 T

Clamping unit				1600 T
with clamping force		max.	kN	2000
Opening force | stroke		max.	kN | mm	115 | 300
Mould height, fixed | variable		min.	mm	400 | ---
Platen daylight fixed | variable		max.	mm	700 | ---
Table diameter			mm	1600
Angle of rotation, left/right				180°
Rotation time for 180°		min.	s	2,4
Weight on rotary table		max.	kg	2000
Weight of movable mould half		max.	kg	1000
Ejector force | stroke		max.	kN | mm	45 | 175
Dry cycle time EUROMAP [2]	2 pumps	min.	s - mm	4,3 - 290
	Accum.	min.	s - mm	---

Injection unit				170			290		
with screw diameter			mm	25	30	35	30	35	40
Effective screw length			L/D	24	20	17	23,3	20	17,5
Screw stroke		max.	mm		120			150	
Calculated stroke volume		max.	cm³	59	85	115	106	144	188
Shot weight		max.	g PS	54	77	105	97	132	172
Material throughput		max.	kg/h PS	10	13,5	16	17	20,5	24,5
		max.	kg/h PA6.6	5	7	8	8,5	10,5	12,5
Injection pressure		max.	bar	2500	2000	1470	2500	2000	1530
Holding pressure		max.	bar	2500	2000	1470	2500	2000	1530
Injection flow [2]	2 pumps	max.	cm³/s	94	136	186	130	178	232
	Accum.	max.	cm³/s	216	312	424	316	430	562
Screw circumferential	2 pumps	max.	m/min	63	75	80	59	69	79
speed [2]	Accum.	max.	m/min	14	17	19	20	24	27
Screw torque		max.	Nm		250			380	
Nozzle contact force | retraction stroke		max.	kN | mm		50 | 300			60 | 300	
Heating capacity | zones			kW		9,4 | 5			6,4 | 5	
Feed hopper			l		50			50	

Drive and connection				2 pumps		Accum.	
with injection unit				170	290	170	290
Net weight of machine			kg	10900	11000	10900	11000
Sound press. level | Insecurity [4]			dB(A)		70|3		70|3
Oil filling			l		240		240
Drive power [2]		max.	kW		18,5		18,5
Electrical connection [3]			kW	33	30	33	30
	Total		A		100		100
	Machine		A		---		---
	Heating		A		---		---
Cooling water connection		max.	°C		30		30
		min.	Δp bar		1,5 | DN 25		1,5 | DN 25

Machine type
with EUROMAP size designation [1]
1600 T 2000-170 | 290

Upon request: other machine types and mould installation heights, screws, drive powers etc.
All specifications relate to the basic machine version. Deviations are possible depending on variants, process settings and material type. Depending on the drive, certain combinations, e.g. max. injection pressure and max. injection flow may be mutually exclusive.

1) Clamping force (kN) - size of injection unit = max. stroke volume (cm³) x max. injection pressure (kbar)
2) Specifications depend on the drive variant / drive configuration.
3) Specifications relate to 400 V/50 Hz.
4) Emission sound pressure level at the workplace. Detailed information in the operating instructions.
[ ] Specifications apply to alternative equipment.

TECHNICAL DATA | 1600 T

Clamping unit				1600 T
with clamping force		max.	kN	2000
Opening force | stroke		max.	kN | mm	115 | 300
Mould height, fixed | variable		min.	mm	400 | ---
Platen daylight fixed | variable		max.	mm	700 | ---
Table diameter			mm	1600
Angle of rotation, left/right				180°
Rotation time for 180°		min.	s	2,4
Weight on rotary table		max.	kg	2000
Weight of movable mould half		max.	kg	1000
Ejector force | stroke		max.	kN | mm	45 | 175
Dry cycle time EUROMAP [2]	2 pumps	min.	s - mm	4,3 - 290
	Accum.	min.	s - mm	---

Injection unit				400			800		
with screw diameter			mm	35	40	45	45	50	55
Effective screw length			L/D	23	20	18	22	20	18
Screw stroke		max.	mm		160			200	
Calculated stroke volume		max.	cm³	154	201	254	318	392	474
Shot weight		max.	g PS	141	184	232	291	359	434
Material throughput		max.	kg/h PS	25	29	35	46	53	59
		max.	kg/h PA6.6	12,5	15	17,5	23	27	30
Injection pressure		max.	bar	2500	2000	1580	2470	2000	1650
Holding pressure		max.	bar	2500	2000	1580	2470	2000	1650
Injection flow [2]	2 pumps	max.	cm³/s	128	168	212	174	214	260
	Accum.	max.	cm³/s	492	642	814	530	656	792
Screw circumferential	2 pumps	max.	m/min	47	53	90	59	69	79
speed [2]	Accum.	max.	m/min	16	19	21	15	17	19
Screw torque		max.	Nm		550			880	
Nozzle contact force | retraction stroke		max.	kN | mm		60 | 400			70 | 400	
Heating capacity | zones			kW		9,4 | 5			19,9 | 8	
Feed hopper			l		50			50	

Drive and connection				2 pumps		Accum.	
with injection unit				400	800	400	800
Net weight of machine			kg	11200	11500	11200	11500
Sound press. level | Insecurity [4]			dB(A)		70|3		70|3
Oil filling			l		240		240
Drive power [2]		max.	kW	22	30	22	30
Electrical connection [3]			kW	36	55	36	55
	Total		A	100	125	100	125
	Machine		A		---		---
	Heating		A		---		---
Cooling water connection		max.	°C		30		30
		min.	Δp bar		1,5 | DN 25		1,5 | DN 25

Machine type
with EUROMAP size designation [1]
1600 T 2000-400 | 800

Upon request: other machine types and mould installation heights, screws, drive powers etc.
All specifications relate to the basic machine version. Deviations are possible depending on variants, process settings and material type. Depending on the drive, certain combinations, e.g. max. injection pressure and max. injection flow may be mutually exclusive.

1) Clamping force (kN) - size of injection unit = max. stroke volume (cm³) x max. injection pressure (kbar)
2) Specifications depend on the drive variant / drive configuration.
3) Specifications relate to 400 V/50 Hz.
4) Emission sound pressure level at the workplace. Detailed information in the operating instructions.
[ ] Specifications apply to alternative equipment.

MOULD INSTALLATION DIMENSIONS UP TO 2000 KN | 1600 T

Moving mould mounting platen | B

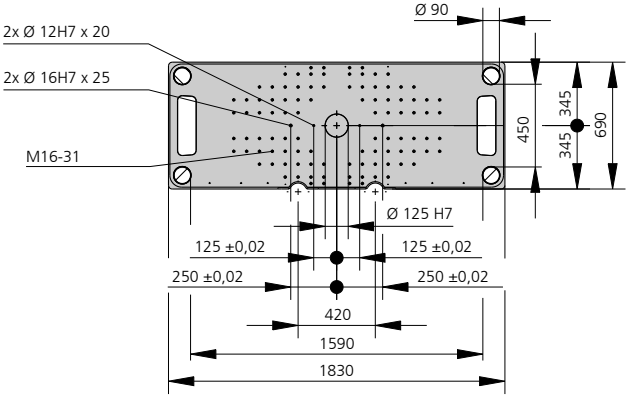

Mould mounting platen (rotary table) | A

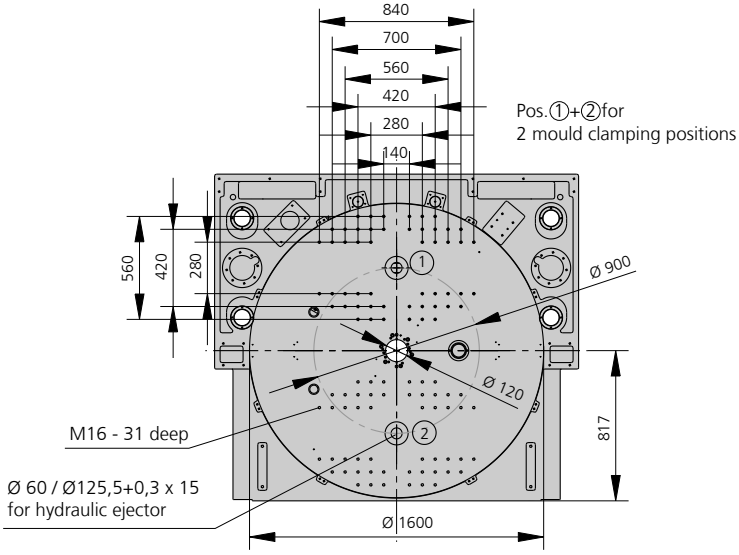

Usable mounting surface

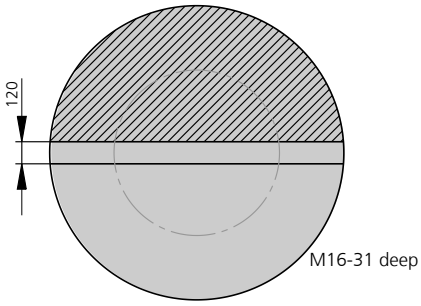

Mould grid dimensions 2-station mould

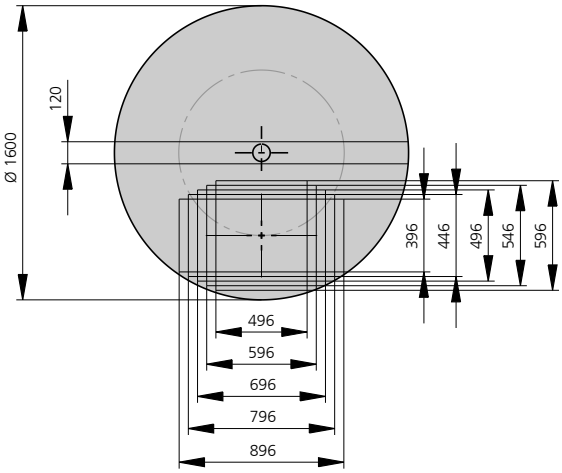

MOULD INSTALLATION DIMENSIONS UP TO 2000 KN | 1600 T

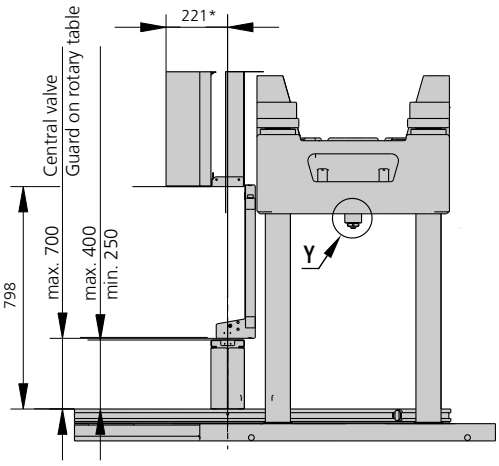

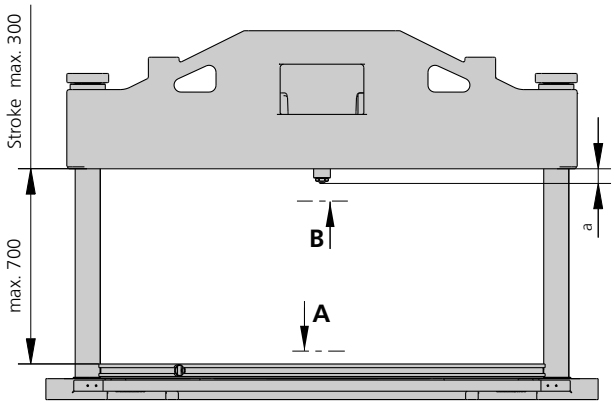

*Dimensions from table centre
(guard of projecting edge + safety gate)

Ejector bolt

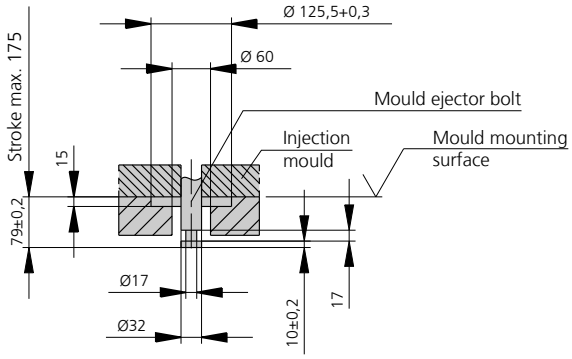

a max.	Injection unit	
	170 / 290	400 / 800
Standard	35	50
Duromer	15	50

	Injection unit			
	70 / 100	170 / 290	400	800
a min	200	200	300	300
a max	350	350	450	450
b min	100	100	100	120
c min	220	220	220	200

Bore in mould (if required) | Y

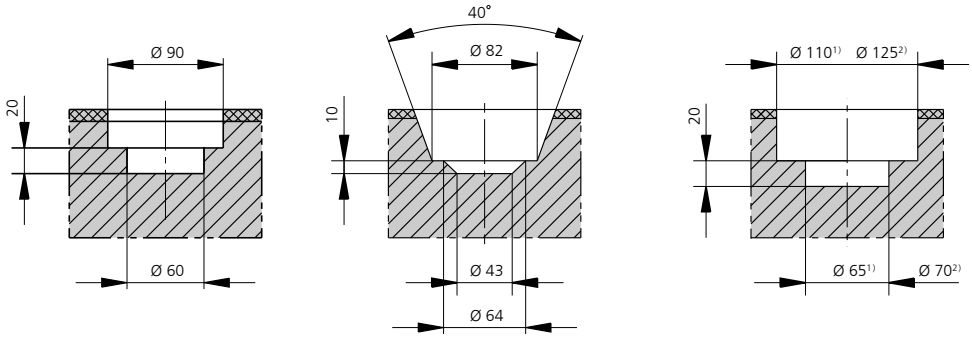

Injection unit 170 / 290

Injection unit 400 / 800

Injection unit 400[1] / 800[2]
Thermoset version

1) Dimension from table centre (projecting edge protection + sliding guard)
2) Injection unit 400
3) Injection unit 800

MACHINE DIMENSIONS FROM 2500 KN | 1600 T

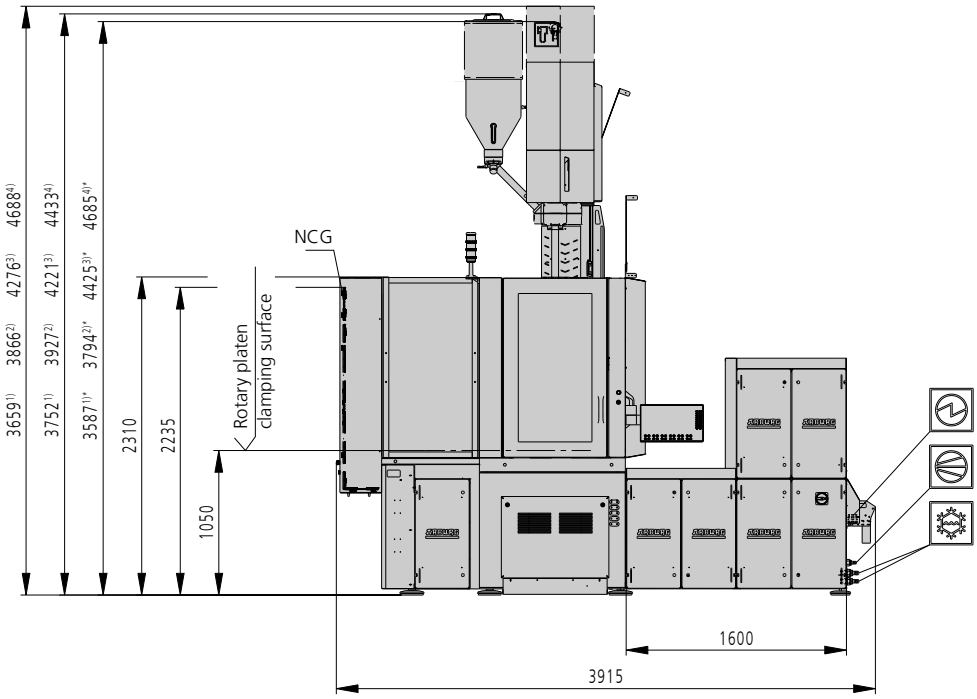

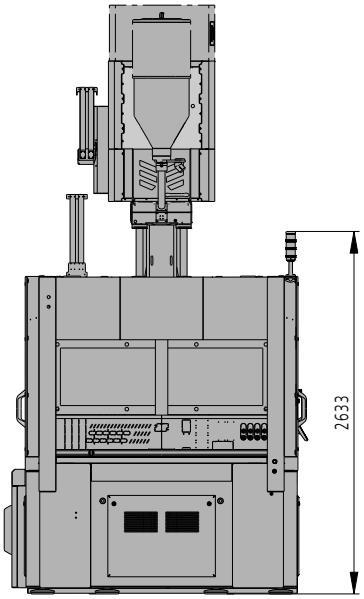

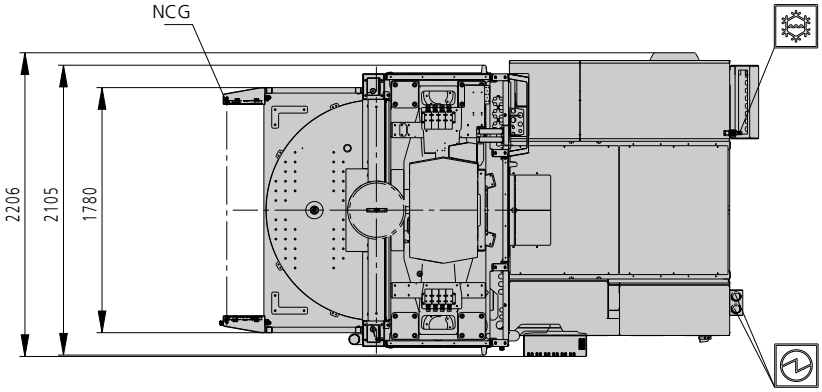

Pneumatic connection

Electrical connection

Cooling water connection

1) Injection unit 170
2) Injection unit 290
3) Injection unit 400
4) Injection unit 800
NCG - Non-contacting guard (photoelectric safety barrier)
* Attachment point for hoisting equipment with lifted injection unit

TECHNICAL DATA | 1600 T

Clamping unit				1600 T
with clamping force		max.	kN	2500
Opening force | stroke		max.	kN | mm	115 | 300
Mould height, fixed | variable		min.	mm	400 | ---
Platen daylight fixed | variable		max.	mm	700 | ---
Table diameter			mm	1600
Angle of rotation, left/right				180°
Rotation time for 180°		min.	s	2,4
Weight on rotary table		max.	kg	2000
Weight of movable mould half		max.	kg	1000
Ejector force | stroke		max.	kN | mm	45 | 175
Dry cycle time EUROMAP [2]	2 pumps	min.	s - mm	4,3 - 290
	Accum.	min.	s - mm	---

Injection unit				170			290		
with screw diameter			mm	25	30	35	30	35	40
Effective screw length			L/D	24	20	17	23,3	20	17,5
Screw stroke		max.	mm		120			150	
Calculated stroke volume		max.	cm³	59	85	115	106	144	188
Shot weight		max.	g PS	54	77	105	97	132	172
Material throughput		max.	kg/h PS	10	13,5	16	17	20,5	24,5
		max.	kg/h PA6.6	5	7	8	8,5	10,5	12,5
Injection pressure		max.	bar	2500	2000	1470	2500	2000	1530
Holding pressure		max.	bar	2500	2000	1470	2500	2000	1530
Injection flow [2]	2 pumps	max.	cm³/s	94	136	186	130	178	232
	Accum.	max.	cm³/s	216	312	424	316	430	562
Screw circumferential	2 pumps	max.	m/min	63	75	80	59	69	79
speed [2]	Accum.	max.	m/min	14	17	19	20	24	27
Screw torque		max.	Nm		250			380	
Nozzle contact force | retraction stroke		max.	kN | mm		50 | 300			60 | 300	
Heating capacity | zones			kW		9,4 | 5			6,4 | 5	
Feed hopper			l		50			50	

Drive and connection				2 pumps		Accum.	
with injection unit				170	290	170	290
Net weight of machine			kg	10900	11000	10900	11000
Sound press. level | Insecurity [4]			dB(A)		70|3		70|3
Oil filling			l		240		240
Drive power [2]		max.	kW		18,5		18,5
Electrical connection [3]			kW	33	30	33	30
	Total		A		100		100
	Machine		A		---		---
	Heating		A		---		---
Cooling water connection		max.	°C		30		30
		min.	Δp bar		1,5 | DN 25		1,5 | DN 25

Machine type
with EUROMAP size designation [1]
1600 T 2500-170 | 290

Upon request: other machine types and mould installation heights, screws, drive powers etc.
All specifications relate to the basic machine version. Deviations are possible depending on variants, process settings and material type. Depending on the drive, certain combinations, e.g. max. injection pressure and max. injection flow may be mutually exclusive.

1) Clamping force (kN) - size of injection unit = max. stroke volume (cm³) x max. injection pressure (kbar)
2) Specifications depend on the drive variant / drive configuration.
3) Specifications relate to 400 V/50 Hz.
4) Emission sound pressure level at the workplace. Detailed information in the operating instructions.
[ ] Specifications apply to alternative equipment.

TECHNICAL DATA | 1600 T

Clamping unit				1600 T
with clamping force		max.	kN	2500
Opening force | stroke		max.	kN | mm	115 | 300
Mould height, fixed | variable		min.	mm	400 | ---
Platen daylight fixed | variable		max.	mm	700 | ---
Table diameter			mm	1600
Angle of rotation, left/right				180°
Rotation time for 180°		min.	s	2,4
Weight on rotary table		max.	kg	2000
Weight of movable mould half		max.	kg	1000
Ejector force | stroke		max.	kN | mm	45 | 175
Dry cycle time EUROMAP [2]	2 pumps	min.	s - mm	4,3 - 290
	Accum.	min.	s - mm	---

Injection unit				400			800		
with screw diameter			mm	35	40	45	45	50	55
Effective screw length			L/D	23	20	18	22	20	18
Screw stroke		max.	mm		160			200	
Calculated stroke volume		max.	cm³	154	201	254	318	392	474
Shot weight		max.	g PS	141	184	232	291	359	434
Material throughput		max.	kg/h PS	25	29	35	46	53	59
		max.	kg/h PA6.6	12,5	15	17,5	23	27	30
Injection pressure		max.	bar	2500	2000	1580	2470	2000	1650
Holding pressure		max.	bar	2500	2000	1580	2470	2000	1650
Injection flow [2]	2 pumps	max.	cm³/s	128	168	212	174	214	260
	Accum.	max.	cm³/s	492	642	814	530	656	792
Screw circumferential	2 pumps	max.	m/min	47	53	60	54	60	66
speed [2]	Accum.	max.	m/min	16	19	21	15	17	19
Screw torque		max.	Nm	480	550	610		880	
Nozzle contact force | retraction stroke		max.	kN | mm		60 | 400			70 | 400	
Heating capacity | zones			kW		9,4 | 5			19,9 | 8	
Feed hopper			l		50			---	

Drive and connection				2 pumps			Accum.		
with injection unit				400	800	1300	400	800	1300
Net weight of machine			kg	18200	18500	21500		---	
Sound press. level | Insecurity [4]			dB(A)		---			---	
Oil filling			l		260			260	
Drive power [2]		max.	kW	22	30	45		---	
Electrical connection [3]			kW	36	55	71		---	
	Total		A	100	125			---	
	Machine		A		---			---	
	Heating		A		---			---	
Cooling water connection		max.	°C		25			25	
		min.	Δp bar		1,5 | DN 25			1,5 | DN 25	

Machine type
with EUROMAP size designation [1]
1800 T 2500-400 | 800 | 1300

Upon request: other machine types and mould installation heights, screws, drive powers etc.
All specifications relate to the basic machine version. Deviations are possible depending on variants, process settings and material type. Depending on the drive, certain combinations, e.g. max. injection pressure and max. injection flow may be mutually exclusive.

1) Clamping force (kN) - size of injection unit = max. stroke volume (cm³) x max. injection pressure (kbar)
2) Specifications depend on the drive variant / drive configuration.
3) Specifications relate to 400 V/50 Hz.
4) Emission sound pressure level at the workplace. Detailed information in the operating instructions.
[ ] Specifications apply to alternative equipment.

MOULD INSTALLATION DIMENSIONS FROM 2500 KN | 1600 T

Moving mould mounting platen | B

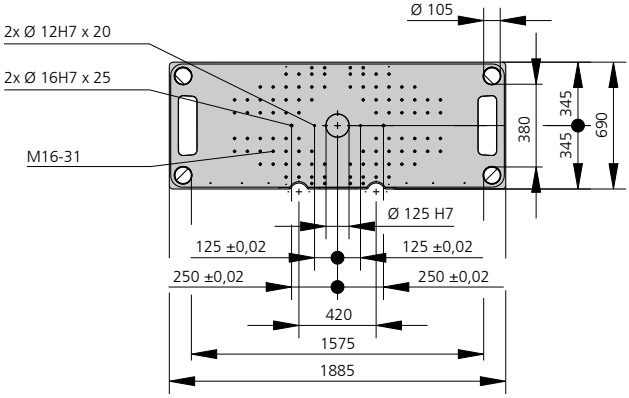

Mould mounting platen (rotary table) | A

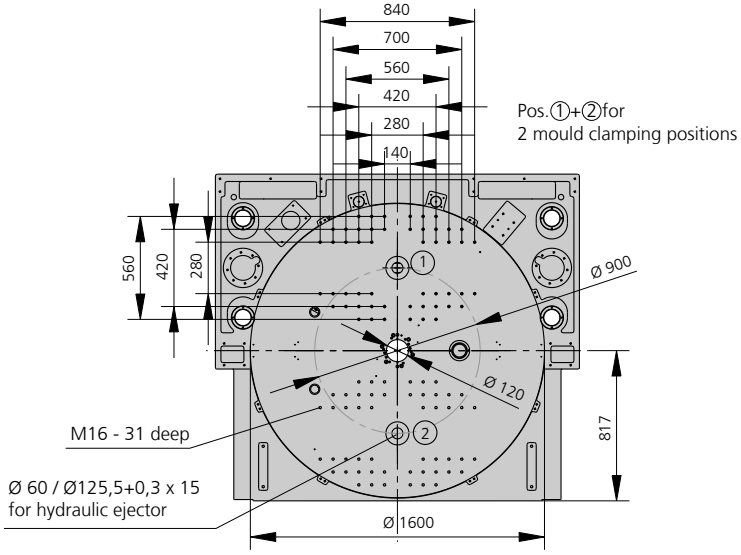

Usable mounting surface

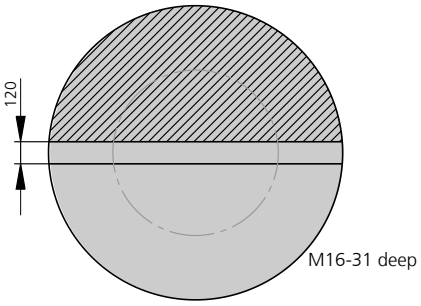

Mould grid dimensions 2-station mould

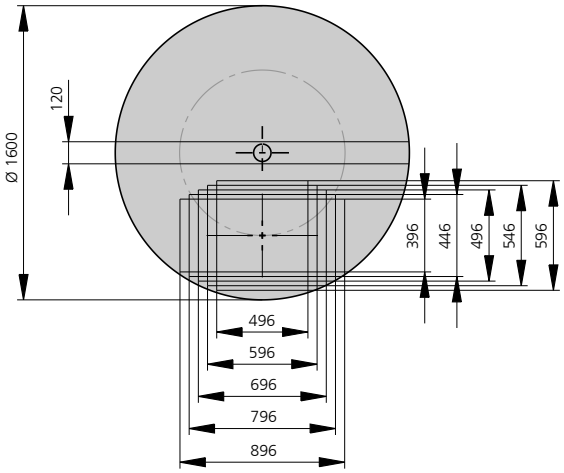

MOULD INSTALLATION DIMENSIONS UP TO 2500 KN | 1600 T

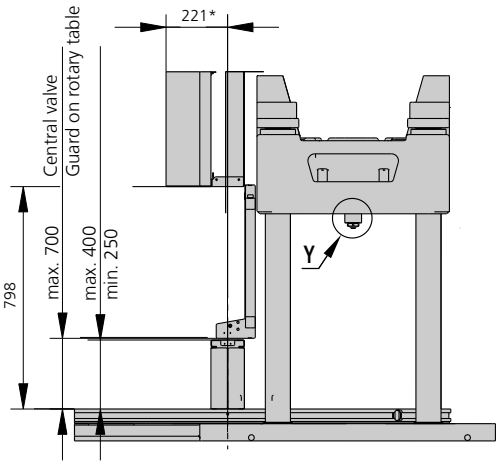

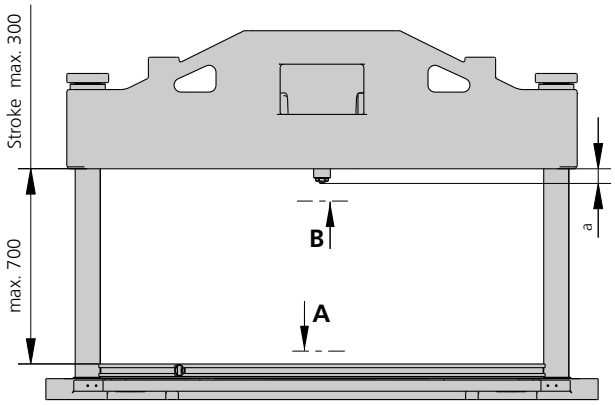

*Dimensions from table centre
(guard of projecting edge + safety gate)

Ejector bolt

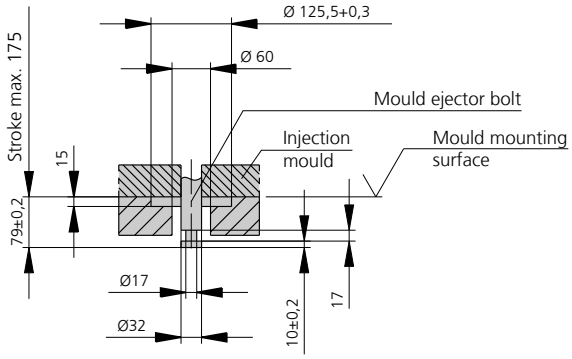

a max.	Injection unit	
	170 / 290	400 / 800
Standard	35	50
Duromer	15	50

Bore in mould (if required) | Y

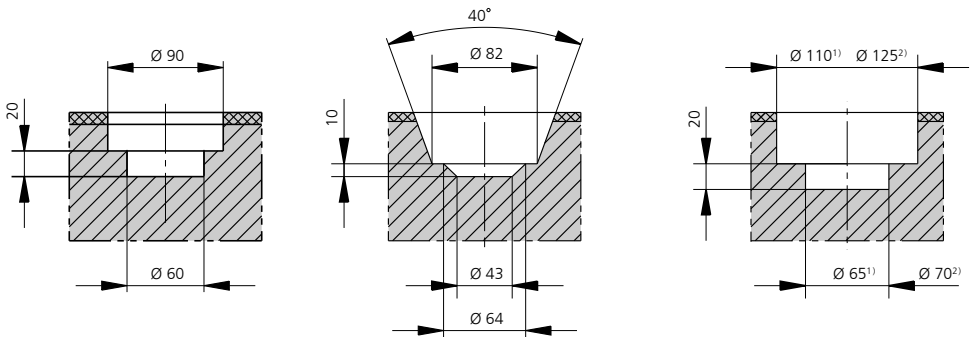

Injection unit 170 / 290

Injection unit 400 / 800

Injection unit 400[1] / 800[2]
Thermoset version

1) Dimension from table centre (projecting edge protection + sliding guard)
2) Injection unit 400
3) Injection unit 800

SHOT WEIGHTS | 1600 T

Theoretical shot weights for the most important injection moulding materials

Injection units according to EUROMAP		70			100			170		
Screw diameter	mm	18	22	25	20	25	30	25	30	35
Polystyrene	max. g PS	21	31	40	29	45	65	54	77	105
Styrene heteropolymerizates	max. g SB	20	31	39	28	44	63	53	76	103
	max. g SAN, ABS[1)]	20	30	39	27	43	62	52	74	101
Cellulose acetate	max. g CA[1)]	24	35	45	32	50	73	61	87	119
Celluloseacetobutyrate	max. g CAB[1)]	22	33	42	30	47	68	56	81	110
Polymethyl methacrylate	max. g PMMA	22	32	42	30	46	67	56	80	109
Polyphenylene ether, mod.	max. g PPE	19	29	37	27	42	60	50	72	98
Polycarbonate	max. g PC	22	33	42	30	47	68	57	81	111
Polysulphone	max. g PSU	23	34	44	31	49	70	58	84	115
Polyamides	max. g PA 6.6 | PA 6[1)]	21	31	40	28	44	64	53	77	104
	max. g PA 6.10 | PA 11[1)]	19	29	37	26	41	60	50	72	98
Polyoximethylene (Polyacetal)	max. g POM	26	39	50	35	55	80	66	96	130
Polyethylene terephthalate	max. g PET	25	37	48	34	53	77	64	92	126
Polyethylene	max. g PE-LD	16	24	30	22	34	49	41	59	80
	max. g PE-HD	16	24	31	22	35	50	42	60	82
Polypropylene	max. g PP	17	25	32	23	36	51	43	62	84
Fluorpolymerides	max. g FEP, PFA, PCTFE[1)]	33	50	65	46	72	103	86	124	169
	max. g ETFE	29	44	57	40	63	91	76	109	148
Polyvinyl chloride	max. g PVC-U	25	38	49	35	54	78	65	94	127
	max. g PVC-P[1)]	23	35	45	32	50	72	60	87	118

1) average value

Injection units according to EUROMAP		290			400			800		
Screw diameter	mm	30	35	40	35	40	45	45	50	55
Polystyrene	max. g PS	97	132	172	141	184	232	291	359	434
Styrene heteropolymerizates	max. g SB	95	129	168	137	179	227	284	350	424
	max. g SAN, ABS[1)]	93	126	165	135	176	223	278	344	416
Cellulose acetate	max. g CA[1)]	109	148	194	158	207	262	327	404	488
Celluloseacetobutyrate	max. g CAB[1)]	101	138	180	147	192	243	304	375	454
Polymethyl methacrylate	max. g PMMA	100	136	178	145	190	240	300	371	449
Polyphenylene ether, mod.	max. g PPE	90	122	160	131	171	216	270	333	403
Polycarbonate	max. g PC	102	139	181	148	193	244	305	377	456
Polysulphone	max. g PSU	105	143	187	153	199	252	316	390	471
Polyamides	max. g PA 6.6 | PA 6[1)]	96	131	171	140	183	231	289	357	431
	max. g PA 6.10 | PA 11[1)]	90	122	160	131	171	216	270	333	403
Polyoximethylene (Polyacetal)	max. g POM	120	163	213	174	227	287	359	443	536
Polyethylene terephthalate	max. g PET	115	157	205	167	219	277	346	427	517
Polyethylene	max. g PE-LD	73	100	130	106	139	176	219	271	328
	max. g PE-HD	76	103	134	110	143	181	227	280	339
Polypropylene	max. g PP	77	105	137	112	146	185	232	286	346
Fluorpolymerides	max. g FEP, PFA, PCTFE[1)]	155	211	276	225	294	372	465	574	695
	max. g ETFE	136	185	242	196	256	324	408	504	609
Polyvinyl chloride	max. g PVC-U	117	159	208	170	222	281	351	434	525
	max. g PVC-P[1)]	108	147	192	157	205	260	324	401	485

1) average value

ARBURG GmbH + Co KG
Arthur-Hehl-Strasse
72290 Lossburg
Tel.: +49 7446 33-0
www.arburg.com
contact@arburg.com

682167_EN_GB_092022 · Subject to alterations

© 2022 ARBURG GmbH + Co KG | All data and technical information have been compiled with great care. However we accept no responsibility for correctness. Individual illustrations and information may deviate from the actual delivery condition of the machine. The relevant valid operating instructions are applicable for the installation and operation of the machine.