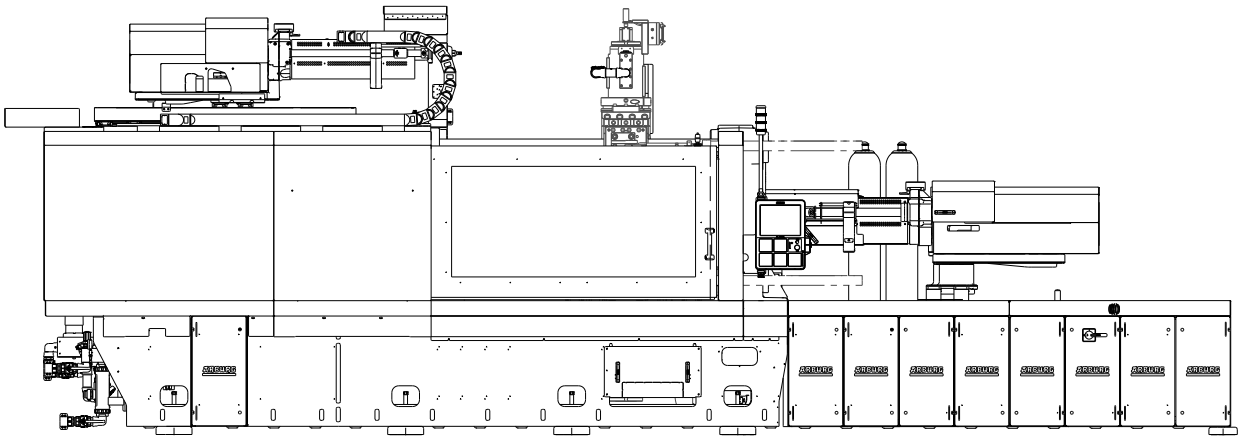

ALLROUNDER CUBE 2900

Distance between tie bars: 820 x 820 mm
Clamping force: 2900 kN
Injection unit: 400, 800, 1300, 2100, 3200 – horizontal
70, 100, 170, 290, 400, 800, 1300 – moving

ARBURG

MACHINE DIMENSIONS | CUBE 2900

Machine dimensions based on example of the ALLROUNDER CUBE 2900 - 800/400 machine size

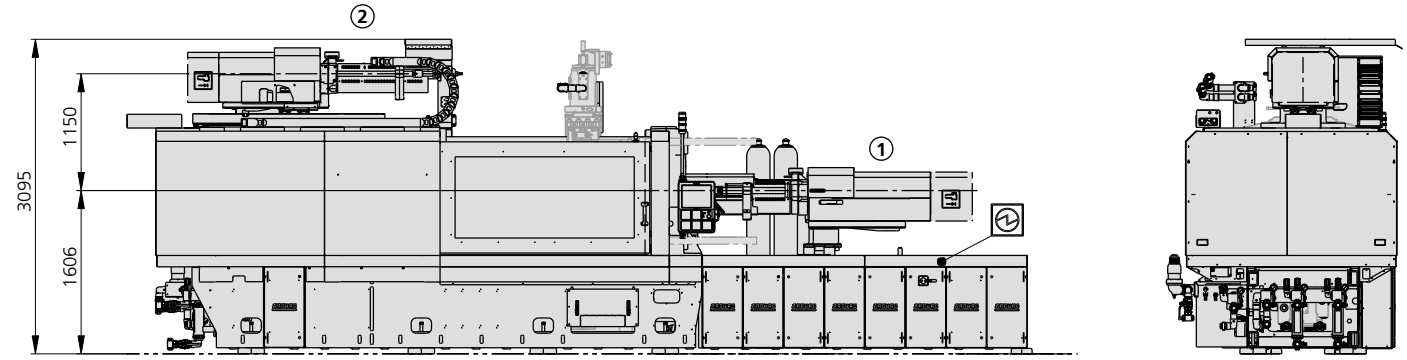

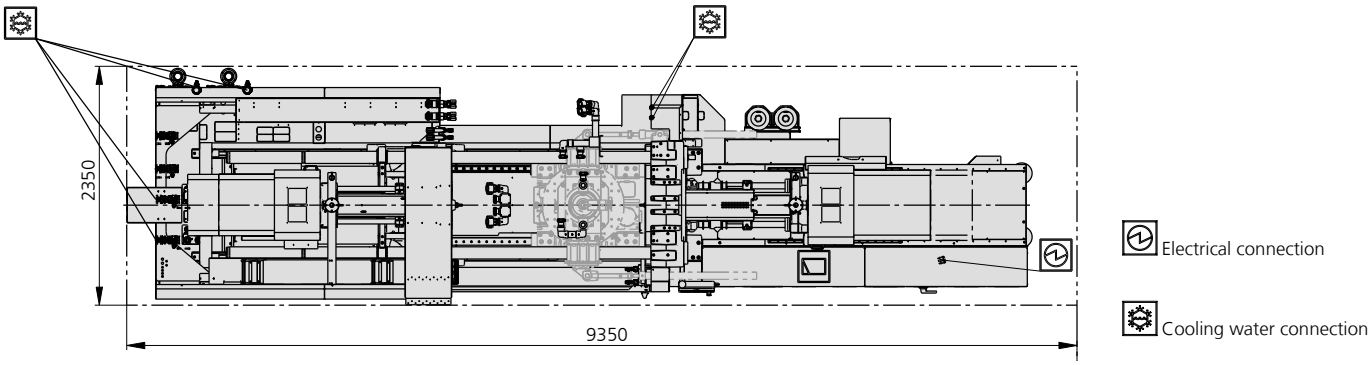

Available injection units

Position		Size								
		70	100	170	290	400	800	1300	2100	3200
① **horizontal**										
② **moving**	**vertikal**									
	horizontal									

The installation dimensions may vary due to additional special options and peripherals.

TECHNICAL DATA | CUBE 2900

Clamping unit			**2900 CUBE**
with clamping force	max.	kN	2900
Opening force | stroke	max.	kN | mm	--- | 600
Mould height, fixed | variable	min.	mm	--- | 1300-1900
Platen daylight fixed | variable	max.	mm	--- | 1900-2500
Distance between tie bars (w x h)		mm	820 x 820
Mould mounting platens (w x h)	max.	mm	1171 x 1171
Ejector force | stroke	max.	kN | mm	86 | 250
Dry cycle time EUROMAP [2]	min.	s - mm	1,8 - 574

Injection unit [1]			**70**			**100**			**170**		
with screw diameter		mm	18	22	25	20	25	30	25	30	35
Effective screw length		L/D	24,5	20	17,5	25	20	16,7	24	20	17
Screw stroke	max.	mm		90			100			120	
Calculated stroke volume	max.	cm³	23	34	44	31	49	71	59	85	115
Shot weight	max.	g PS	21	31	40	29	45	65	54	77	105
Material throughput	max.	kg/h PS	4,1	5,5	6,5	5,5	8	9,5	10	13,5	16
	max.	kg/h PA6.6	2,1	2,8	3,3	2,8	4	4,9	5	7	8
Injection pressure	max.	bar	2500	2000	1550	2500	2000	1390	2500	2000	1470
Holding pressure	max.	bar	2500	2000	1550	2500	2000	1390	2500	2000	1470
Injection flow [2]	max.	cm³/s	140	209	270	173	270	389	221	318	433
Screw circumferential speed [2]	max.	m/min	49	60	68	48	60	72	50	60	70
Screw torque	max.	Nm	90	110	120	120	150	180	210	250	290
Nozzle contact force | retraction stroke	max.	kN | mm		50 | 150			50 | 180			50 | 210	
Heating capacity | zones		kW		4,1 | 4			4,9 | 5			9,4 | 5	

Drive and connection					
with horizontal/moving injection unit				800/400	
Net weight of machine		kg		24000	
Sound press. level | Insecurity [4]		dB(A)		65 | 3	
Oil filling		l		360	
Dimensions	l	mm		9350	
	b	mm		2350	
	h	mm		3095	
Cooling water connection	max.	°C		30	
	min.	Δp bar		1,5 | DN 25	

Upon request: other machine types and mould installation heights, screws, drive powers, etc.
All specifications relate to the basic machine version. Deviations are possible depending on variants, process settings and material type. Depending on the drive, certain combinations, e.g. max. injection pressure and max. injection flow may be mutually exclusive.

1) Size of injection unit = max. stroke volume (cm³) x max. injection pressure (kbar)
2) Specifications depend on the drive variant / drive configuration.
3) Specifications relate to 400 V/50 Hz.
4) Detailed info in the operating instr.
[ ] Specifications apply to alternative equipment.

TECHNICAL DATA | CUBE 2900

Clamping unit			**2900 CUBE**
with clamping force	max.	kN	2900
Opening force | stroke	max.	kN | mm	--- | 600
Mould height, fixed | variable	min.	mm	--- | 1300-1900
Platen daylight fixed | variable	max.	mm	--- | 1900-2500
Distance between tie bars (w x h)		mm	820 x 820
Mould mounting platens (w x h)	max.	mm	1171 x 1171
Ejector force | stroke	max.	kN | mm	86 | 250
Dry cycle time EUROMAP [2]	min.	s - mm	1,8 - 574

Injection unit [1]			**290**			**400**			**800**		
with screw diameter		mm	30	35	40	35	40	45	45	50	55
Effective screw length		L/D	23,3	20	17,5	23	20	18	22	20	18
Screw stroke	max.	mm		150			160			200	
Calculated stroke volume	max.	cm³	106	144	188	154	201	254	318	392	474
Shot weight	max.	g PS	97	132	172	141	184	232	291	359	434
Material throughput	max.	kg/h PS	17	20,5	24,5	25	29	35	46	53	59
	max.	kg/h PA6.6	8,5	10,5	12,5	12,5	15	17,5	23	27	30
Injection pressure	max.	bar	2500	2000	1530	2500	2000	1580	2470	2000	1650
Holding pressure	max.	bar	2500	2000	1530	2500	2000	1580	2470	2000	1650
Injection flow [2]	max.	cm³/s	318	433	565	492	642	814	530	656	792
Screw circumferential speed [2]	max.	m/min	51	60	69	47	54	61	54	60	66
Screw torque	max.	Nm	320	380	430	480	550	610	900	1000	1100
Nozzle contact force | retraction stroke	max.	kN | mm		60 | 240			60 | 300			70 | 300	
Heating capacity | zones		kW		6,4 | 5			9,4 | 5			19,9 | 8	

Drive and connection					
with horizontal/moving injection unit				800/400	
Net weight of machine		kg		24000	
Sound press. level | Insecurity [4]		dB(A)		65 | 3	
Oil filling		l		360	
Dimensions	l	mm		9350	
	b	mm		2350	
	h	mm		3095	
Cooling water connection	max.	°C		30	
	min.	Δp bar		1,5 | DN 25	

Upon request: other machine types and mould installation heights, screws, drive powers, etc.
All specifications relate to the basic machine version. Deviations are possible depending on variants, process settings and material type. Depending on the drive, certain combinations, e.g. max. injection pressure and max. injection flow may be mutually exclusive.

1) Size of injection unit = max. stroke volume (cm³) x max. injection pressure (kbar)
2) Specifications depend on the drive variant / drive configuration.
3) Specifications relate to 400 V/50 Hz.
4) Detailed info in the operating instr.
[ ] Specifications apply to alternative equipment.

TECHNICAL DATA | CUBE 2900

Clamping unit			**2900 CUBE**
with clamping force	max.	kN	2900
Opening force | stroke	max.	kN | mm	--- | 600
Mould height, fixed | variable	min.	mm	--- | 1300-1900
Platen daylight fixed | variable	max.	mm	--- | 1900-2500
Distance between tie bars (w x h)		mm	820 x 820
Mould mounting platens (w x h)	max.	mm	1171 x 1171
Ejector force | stroke	max.	kN | mm	86 | 250
Dry cycle time EUROMAP [2]	min.	s - mm	1,8 - 574

Injection unit [1]			**1300**			**2100**			**3200**		
with screw diameter		mm	55	60	70	60	70	80	70	80	90
Effective screw length		L/D	22	20	17	23	20	17,5	23	20	18
Screw stroke	max.	mm		240			280			320	
Calculated stroke volume	max.	cm³	570	678	923	792	1078	1407	1232	1608	2036
Shot weight	max.	g PS	521	620	844	723	984	1286	1125	1469	1860
Material throughput	max.	kg/h PS	86	96	115	125	145	175	185	215	250
	max.	kg/h PA6.6	43	48	58	62	74	88	93	110	125
Injection pressure	max.	bar	2380	2000	1470	2500	2000	1530	2500	2000	1580
Holding pressure	max.	bar	2380	2000	1470	2500	2000	1530	2500	2000	1580
Injection flow [2]	max.	cm³/s	713	848	1155	848	1155	1508	1155	1508	1909
Screw circumferential speed [2]	max.	m/min	55	60	70	51	60	69	53	60	68
Screw torque	max.	Nm	1510	1640	1920	2140	2500	2850	3140	3590	4040
Nozzle contact force | retraction stroke	max.	kN | mm		90 | 550			110 | 600			110 | 600	
Heating capacity | zones		kW		23 | 8			31,2 | 8			38,6 | 8	

Drive and connection					
with horizontal/moving injection unit				800/400	
Net weight of machine		kg		24000	
Sound press. level | Insecurity [4]		dB(A)		65 | 3	
Oil filling		l		360	
Dimensions	l	mm		9350	
	b	mm		2350	
	h	mm		3095	
Cooling water connection	max.	°C		30	
	min.	Δp bar		1,5 | DN 25	

Upon request: other machine types and mould installation heights, screws, drive powers, etc.
All specifications relate to the basic machine version. Deviations are possible depending on variants, process settings and material type. Depending on the drive, certain combinations, e.g. max. injection pressure and max. injection flow may be mutually exclusive.

1) Size of injection unit = max. stroke volume (cm³) x max. injection pressure (kbar)
2) Specifications depend on the drive variant / drive configuration.
3) Specifications relate to 400 V/50 Hz.
4) Detailed info in the operating instr.
[ ] Specifications apply to alternative equipment.

MOULD INSTALLATION DIMENSIONS | CUBE 2900

Mould installation dimensions based on example of the ALLROUNDER CUBE 2900 - 800/400 machine size

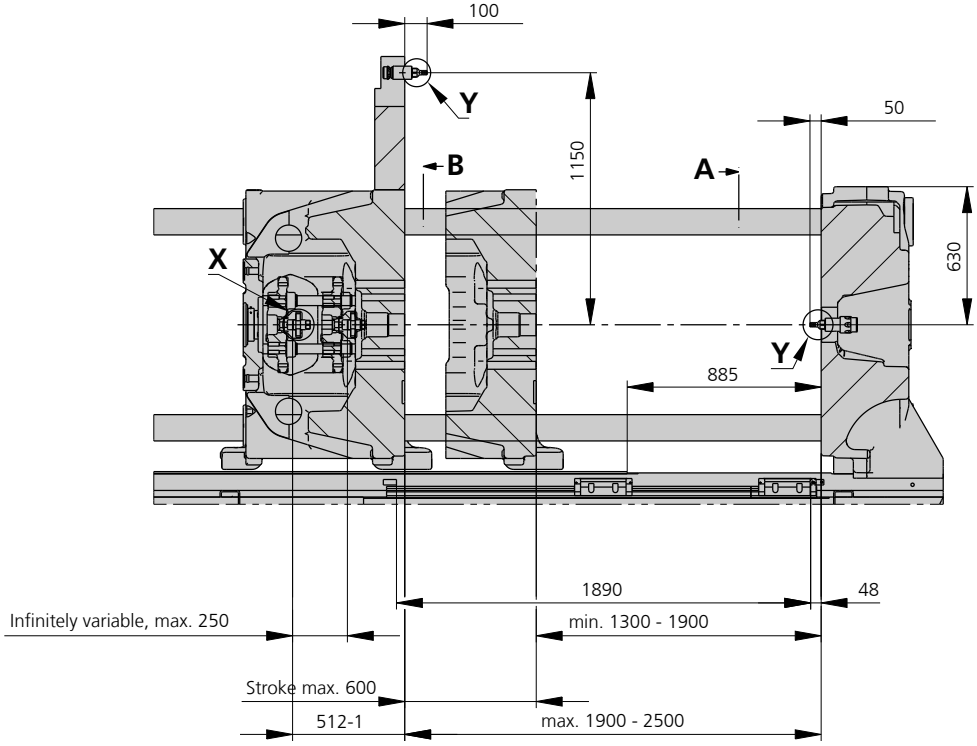

Bore in mould (if required) | Y

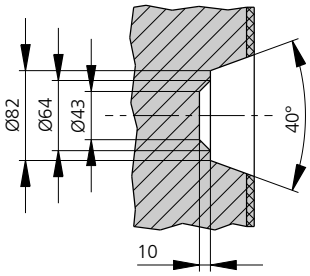

MOULD INSTALLATION DIMENSIONS CUBE 2900

Fixed mould mounting platen | A

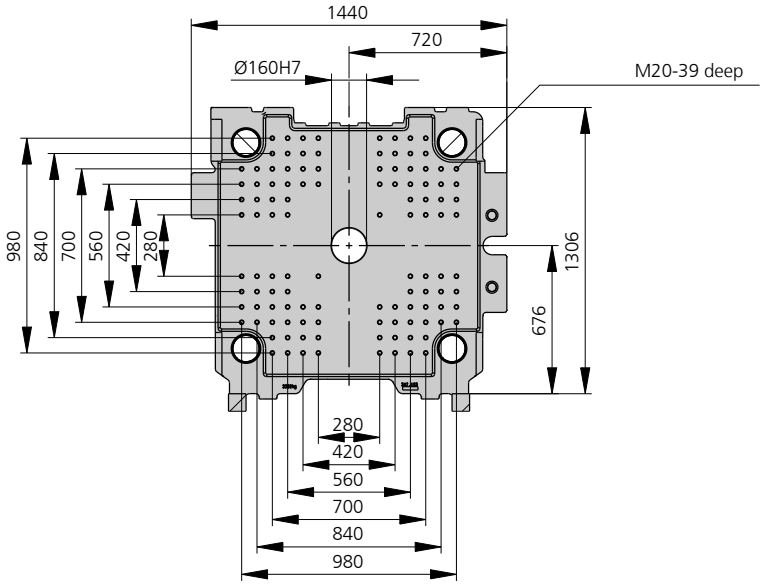

Moving mould mounting platen | B

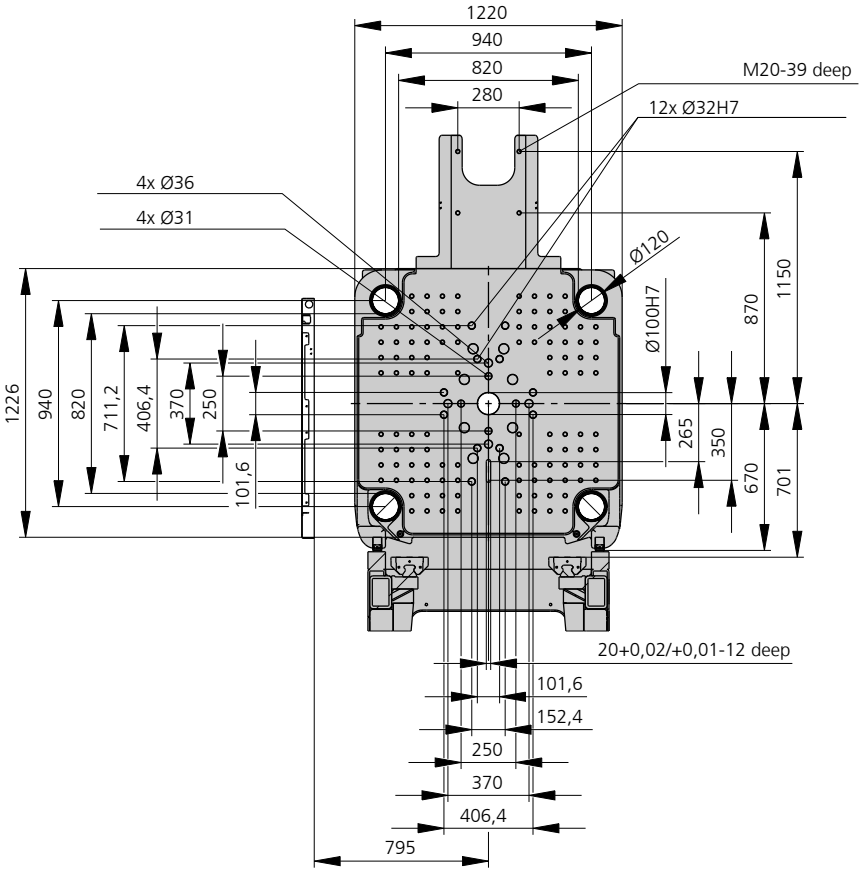

SHOT WEIGHTS | CUBE 2900

Theoretical shot weights for the most important injection moulding materials

Injection units according to EUROMAP		70			170			290		
Screw diameter	mm	18	22	25	25	30	35	30	35	40
Polystyrene	max. g PS	21	31	40	54	77	105	97	132	172
Styrene heteropolymerizates	max. g SB	20	31	39	53	76	103	95	129	168
	max. g SAN, ABS[1)]	20	30	39	52	74	101	93	126	165
Cellulose acetate	max. g CA[1)]	24	35	45	61	87	119	109	148	194
Celluloseacetobutyrate	max. g CAB[1)]	22	33	42	56	81	110	101	138	180
Polymethyl methacrylate	max. g PMMA	22	32	42	56	80	109	100	136	178
Polyphenylene ether, mod.	max. g PPE	19	29	37	50	72	98	90	122	160
Polycarbonate	max. g PC	22	33	42	57	81	111	102	139	181
Polysulphone	max. g PSU	23	34	44	58	84	115	105	143	187
Polyamides	max. g PA 6.6 | PA 6[1)]	21	31	40	53	77	104	96	131	171
	max. g PA 6.10 | PA 11[1)]	19	29	37	50	72	98	90	122	160
Polyoximethylene (Polyacetal)	max. g POM	26	39	50	66	96	130	120	163	213
Polyethylene terephthalate	max. g PET	25	37	48	64	92	126	115	157	205
Polyethylene	max. g PE-LD	16	24	30	41	59	80	73	100	130
	max. g PE-HD	16	24	31	42	60	82	76	103	134
Polypropylene	max. g PP	17	25	32	43	62	84	77	105	137
Fluorpolymerides	max. g FEP, PFA, PCTFE[1)]	33	50	65	86	124	169	155	211	276
	max. g ETFE	29	44	57	76	109	148	136	185	242
Polyvinyl chloride	max. g PVC-U	25	38	49	65	94	127	117	159	208
	max. g PVC-P[1)]	23	35	45	60	87	118	108	147	192

Injection units according to EUROMAP		400			800			1300		
Screw diameter	mm	35	40	45	45	50	55	55	60	70
Polystyrene	max. g PS	141	184	232	291	359	434	521	620	844
Styrene heteropolymerizates	max. g SB	137	179	227	284	350	424	509	606	824
	max. g SAN, ABS[1)]	135	176	223	278	344	416	499	594	808
Cellulose acetate	max. g CA[1)]	158	207	262	327	404	488	586	698	949
Celluloseacetobutyrate	max. g CAB[1)]	147	192	243	304	375	454	545	649	883
Polymethyl methacrylate	max. g PMMA	145	190	240	300	371	449	538	641	872
Polyphenylene ether, mod.	max. g PPE	131	171	216	270	333	403	484	575	783
Polycarbonate	max. g PC	148	193	244	305	377	456	547	651	887
Polysulphone	max. g PSU	153	199	252	316	390	471	566	673	916
Polyamides	max. g PA 6.6 | PA 6[1)]	140	183	231	289	357	431	517	616	838
	max. g PA 6.10 | PA 11[1)]	131	171	216	270	333	403	473	575	783
Polyoximethylene (Polyacetal)	max. g POM	174	227	287	359	443	536	643	765	1042
Polyethylene terephthalate	max. g PET	167	219	277	346	427	517	620	738	1005
Polyethylene	max. g PE-LD	106	139	176	219	271	328	393	468	637
	max. g PE-HD	110	143	181	227	280	339	406	483	658
Polypropylene	max. g PP	112	146	185	232	286	346	415	494	672
Fluorpolymerides	max. g FEP, PFA, PCTFE[1)]	225	294	372	465	574	695	834	992	1350
	max. g ETFE	196	256	324	408	504	609	731	870	1185
Polyvinyl chloride	max. g PVC-U	170	222	281	351	434	525	629	749	1020
	max. g PVC-P[1)]	157	205	260	324	401	485	582	692	942

1) average value

SHOT WEIGHTS | CUBE 2900

Theoretical shot weights for the most important injection moulding materials

Injection units according to EUROMAP		2100			3200		
Screw diameter	mm	60	70	80	70	80	90
Polystyrene	max. g PS	723	984	1286	1125	1469	1860
Styrene heteropolymerizates	max. g SB	707	962	1256	1099	1436	1817
	max. g SAN, ABS[1)]	693	943	1231	1077	1407	1781
Cellulose acetate	max. g CA[1)]	814	1108	1447	1266	1654	2093
Celluloseacetobutyrate	max. g CAB[1)]	757	1030	1346	1177	1538	1946
Polymethyl methacrylate	max. g PMMA	747	1017	1329	1163	1518	1922
Polyphenylene ether, mod.	max. g PPE	671	914	1194	1044	1364	1726
Polycarbonate	max. g PC	760	1034	1351	1182	1544	1954
Polysulphone	max. g PSU	785	1069	1396	1222	1596	2019
Polyamides	max. g PA 6.6 | PA 6[1)]	719	978	1278	1118	1461	1848
	max. g PA 6.10 | PA 11[1)]	671	914	1194	1044	1364	1726
Polyoximethylene (Polyacetal)	max. g POM	893	1215	1588	1389	1814	2296
Polyethylene terephthalate	max. g PET	861	1172	1531	1340	1750	2215
Polyethylene	max. g PE-LD	546	744	971	850	1110	1405
	max. g PE-HD	564	768	1003	877	1146	1450
Polypropylene	max. g PP	576	784	1025	897	1171	1482
Fluorpolymerides	max. g FEP, PFA, PCTFE[1)]	1157	1575	2058	1800	2352	2976
	max. g ETFE	1015	1382	1805	1579	2063	2611
Polyvinyl chloride	max. g PVC-U	874	1190	1554	1360	1776	2247
	max. g PVC-P[1)]	808	1099	1436	1256	1641	2076

1) average value

ARBURG GmbH + Co KG
Arthur-Hehl-Strasse
72290 Lossburg
Tel.: +49 7446 33-0
www.arburg.com
contact@arburg.com

681696_EN_GB_092022 · Subject to alterations